CSEC PHYSICS

May/June 2024

Paper 2 Solutions

Kerwin Springer

Best Online Lessons in the Caribbean
WhatsApp **+1868-310-1306** for more information

STUDENT HUB

SECTION A

Answer ALL questions.

1. (a) Identify the type of lenses shown in Figure 1.

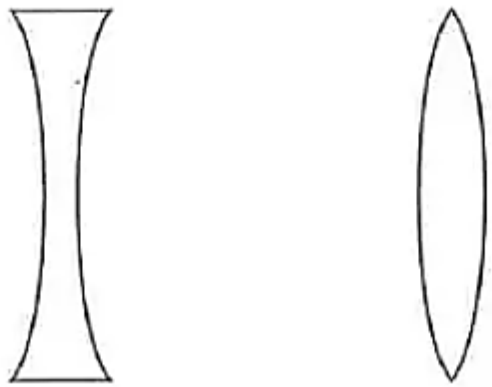

Lens A **Lens B**

Figure 1. Types of lenses

Lens A .....Concave Lens (diverging lens).....

Lens B .....Convex Lens (converging lens).....

(2 marks)

Kerwin Spr

Best Online Lessons in the Caribbean
WhatsApp **+1868-310-1306** for more information

(b) A student used the apparatus shown in Figure 2 to determine the focal length of a lens. She adjusted the position of the lens and screen to obtain a sharp image on the screen. She measured the mage distance, v, deduced the magnification, m, of the object and recorded her results in Table 1 below.

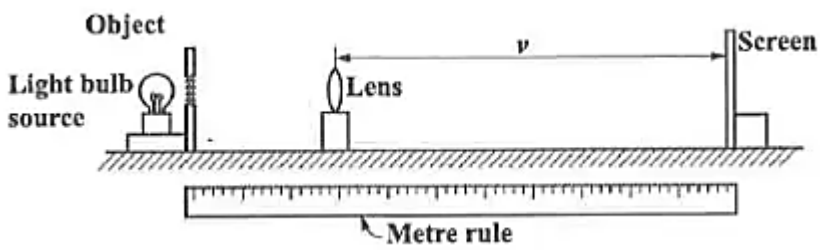

Figure 2. Apparatus set up to determine the focal length of a lens

TABLE 1: IMAGE DISTANCE, v, AND MAGNIFICATION OF THE OBJECT, m

v/cm	20	30	40	50	60	70	80
m	0.15	0.65	1.20	1.85	2.35	2.95	3.52

(i) Using a scale of 2cm to represent 0.50 on the y-axis, plot a graph of magnification, m, against image distance, v, on the grid provided on page 7.

(See following page) (8 marks)

(ii) Calculate the gradient, G.

Gradient $= \frac{y_2 - y_1}{x_2 - x_1}$

Using points (27, 0.5) and (78, 3.4) from Graph

Gradient $= \frac{3.4 - 0.5}{78 - 27}$

$= 0.057 cm^{-1}$

Kerwin Springer

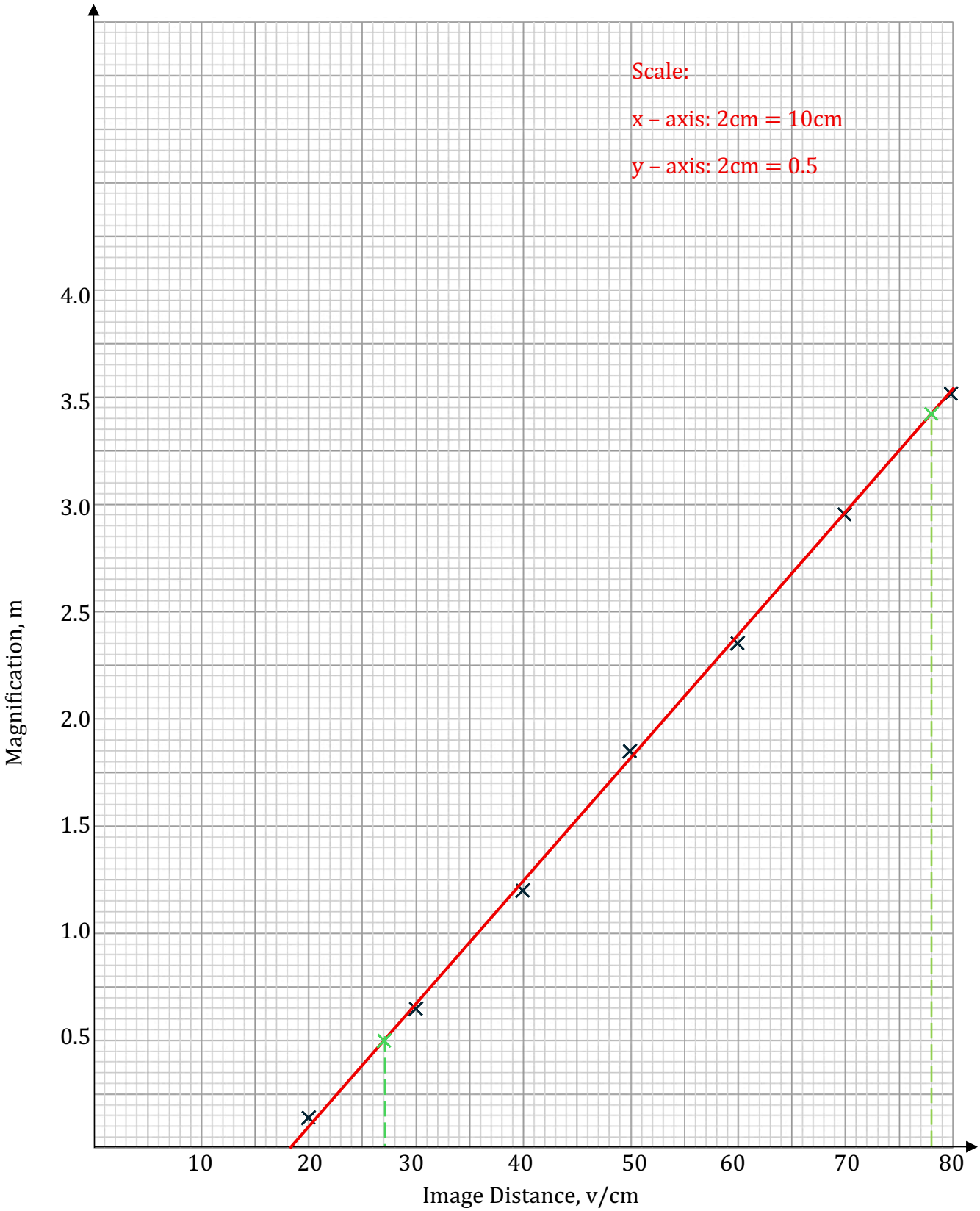

Best Online Lessons in the Caribbean
WhatsApp **+1868-310-1306** for more information

Figure 3. Graph of magnification, m against image distance, v.

(iii) Given that G= $\frac{1}{f}$, calculate the focal length of the lens, f.

$G = \frac{1}{f}$

$f = \frac{1}{G}$

$f = \frac{1}{0.057}$

$f = 17.5\ cm$ (3 marks)

(c) Figure 4 shows a full scale diagram of an object, O, which has a height of 3cm. The object is placed 8 cm in front of a diverging lens L

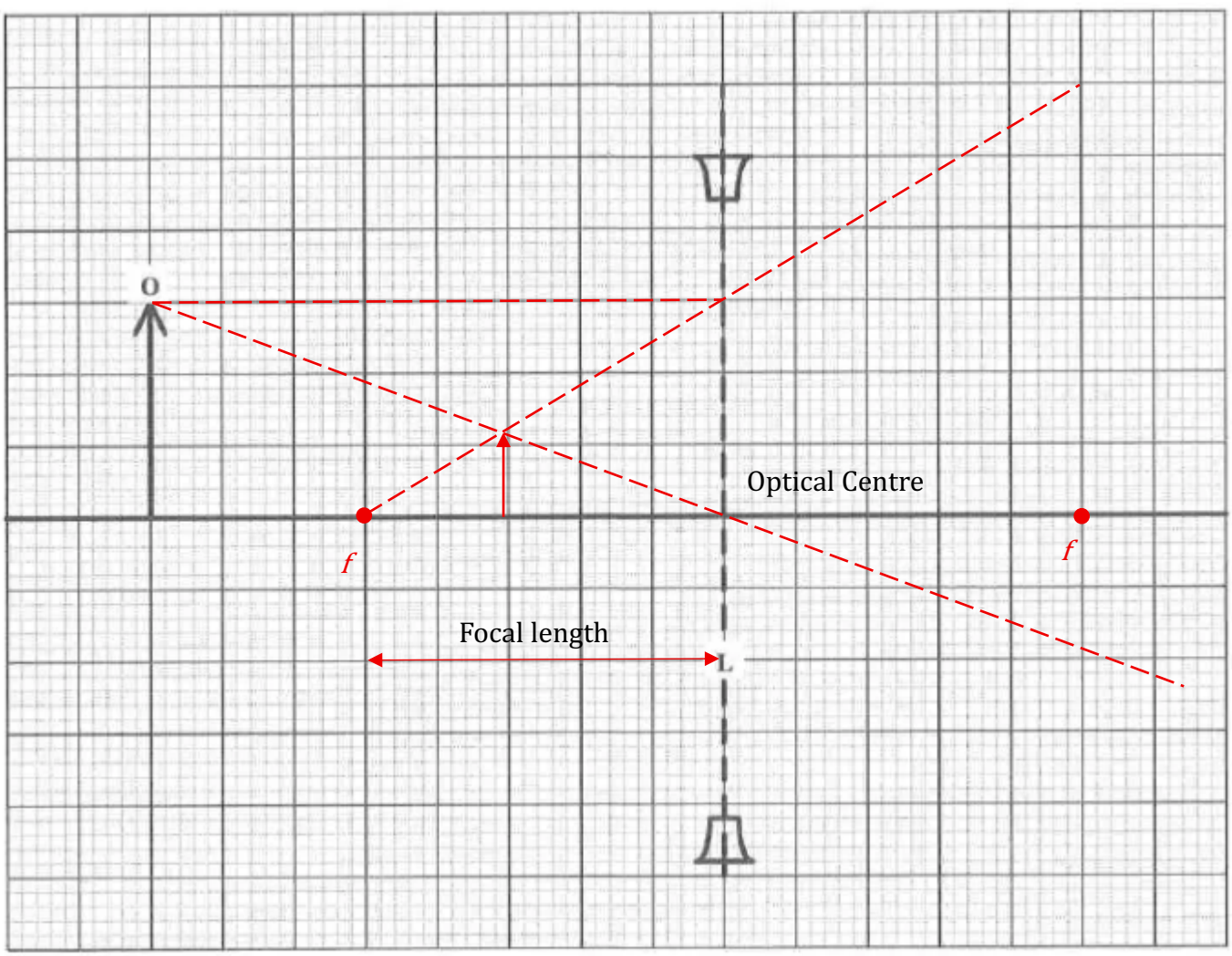

Best Online Lessons in the Caribbean
WhatsApp **+1868-310-1306** for more information

(i) Given that the focal length of the lens is 5 cm, draw the ray diagram in Figure 4 to find the image of the object. (4 marks)

See diagram above

(ii) Record the image distance. (1 mark)

……3 cm……

(iii) State whether the image is real or virtual. (1 mark)

……virtual……

Total 25 marks

2. Figure 5 shows a bottle filled with water resting on the ground in three different positions , A, B and C.

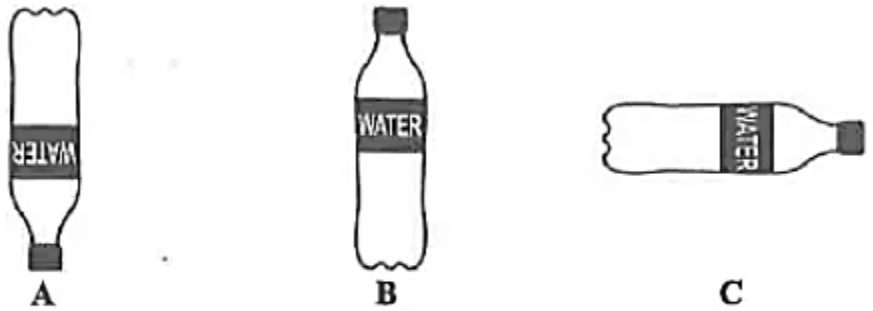

Figure 5. Three different positions of a full bottle of water

(a) State the type of equilibrium for each of the following.

(i) Position A ……Unstable……

(ii) Position B ……Stable……

(iii) Position C ……Neutral……..

(3 marks)

(b) Define the term 'moment of a force'. State its SI unit.

The moment of a force indicates the turning effect of a force in relation to a fulcrum/pivot. It is a product of a force and the perpendicular distance from the line of action of the force and the pivot /fulcrum.

$T = Fd$ (T = Moment, F is force and d is the perpendicular distance)

$\therefore SI\ unit\ is\ Nm$

(4 marks)

(c) Figure 6 shows a uniform metre rule balanced horizontally on a fulcrum with a mass of 0.24 kg hanging from one end. $[g = 10Nkg^{-1}]$

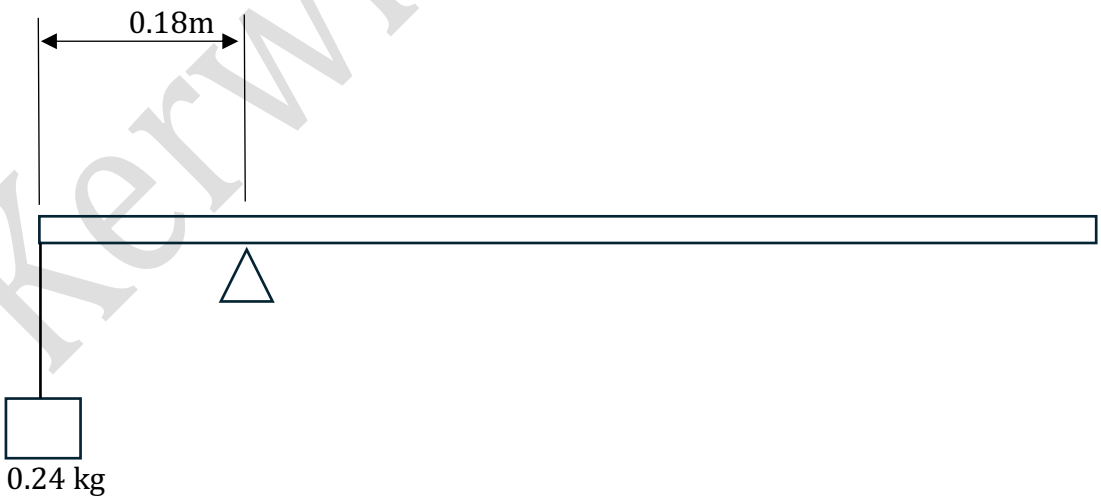

Figure 6. A uniform metre rule

Kerwin Springer

(i) Calculate the weight of the 0.24 kg mass.

$W = mg$

$W = (0.24)(10)$

$W = 2.4N$

(2 marks)

(ii) By taking moments, calculate the weight of the metre rule.

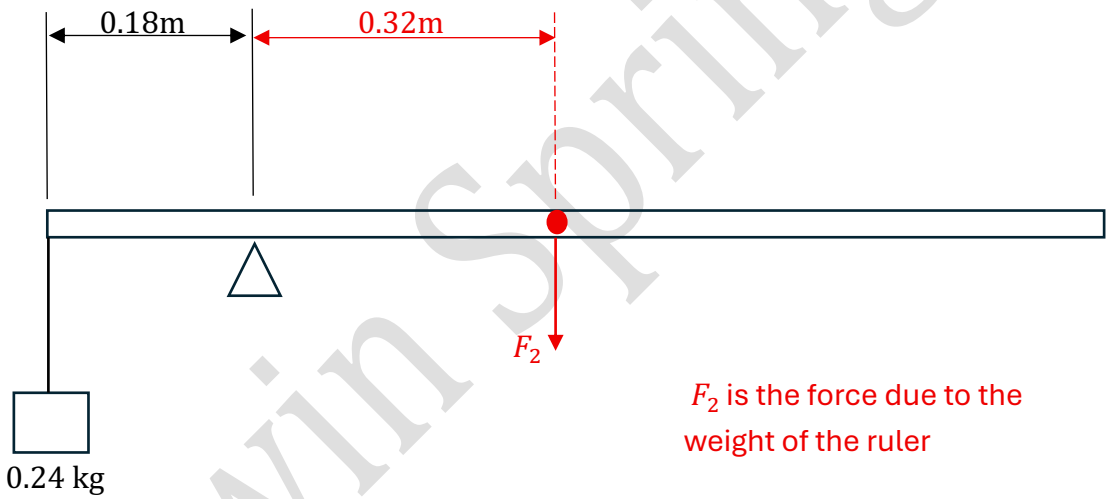

F_2 is the force due to the weight of the ruler

Centre of gravity acting at 0.5m mark

$\therefore d_2 = 0.5 - 0.18$

$= 0.32m$

Kerwin Springer

Principle of Moments

Total clockwise moments = Total anti-clockwise moments

$$F_2\, d_2 = F_1\, d_1$$

$$F_2\,(0.32) = (2.4)(0.18) \qquad \text{since F=mg}$$

$$F_2 = \frac{(2.4)(0.18)}{(0.32)}$$

$$F_2 = 1.35\ \text{N}$$

(4 marks)

(iii) Calculate the magnitude of the force of the fulcrum acting on the metre rule.

$$\sum Upward\ Forces = \sum Downward\ Forces$$

$$F_3 = F_1 + F_2$$

$$F_3 = 2.4 + 1.35$$

$$F_3 = 3.75\ N$$

(2 marks)

Total 15 marks

Kerwin Springer

3. (a) Using arrows, match each mode of heat transfer to ONE correct description.

Mode of Heat Transfer	Description
Conduction	Transfer by medium movement
	Transfer without a medium
Convection	Transfer by electromagnetic wave
	Transfer without medium movement
Radiation	Transfer by physical contact
	Transfer through liquids and gases

(b) Figure 7 shows a section of a solar water heater which utilizes the greenhouse (glasshouse) effect in its operation.

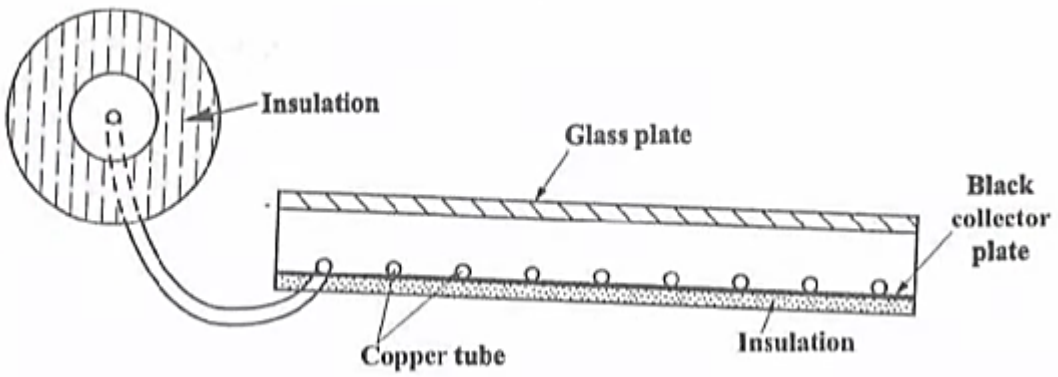

Figure 7. Section of a solar water heater

Vaughn Springer

(i) Briefly describe the greenhouse (glasshouse) effect

Solar radiation enters the earth's atmosphere and warms the planet's surface. Infrared (longer wavelength) radiation is directed back into space, however, the presence of greenhouse gases eg CO_2 absorbs and re-radiates the earth warming up the atmosphere. This stops energy from escaping creating a greenhouse effect.

(4 marks)

(ii) The energy absorbed from the sun by a solar heater is 360kJ. Thirty- five per cent of the energy is transferred to 1.5kg of water in the pipes. Calculate the final temperature of the water if its initial temperature is 30°C.

[Specific heat capacity of water is $4200 Jkg^{-1}°C^{-1}$]

Energy transferred $= 35\% \times 360$

$= 126kJ$ or $126 \times 10^3 J$

This energy is used to heat the H_2O

$$E = mc\Delta T$$

$$126 \times 10^3 = (1.5)(4200)\Delta T$$

$$\Delta T = \frac{(126 \times 10^3)}{(1.5)(4200)}$$

$$\Delta T = 20°C$$

$$Hence\ Final\ Temp = 30°C + 20°C$$

$$= 50°C$$

(6 marks)

Kerwin Springer

(iii) Explain why the pipe (tubes) are made from copper. (2 marks)

Due to being a metal with mobile electrons, copper is an excellent conductor of heat. It can also lose its heat quickly. This means that the transfer of the heat energy from the sun to the water will be optimal.

Total 15 marks

SECTION B

Answer ALL questions.

4. (a) Figure 8 shows a circuit diagram with a low voltage power supply circuit which can be used to test whether a given material is a conductor or insulator.

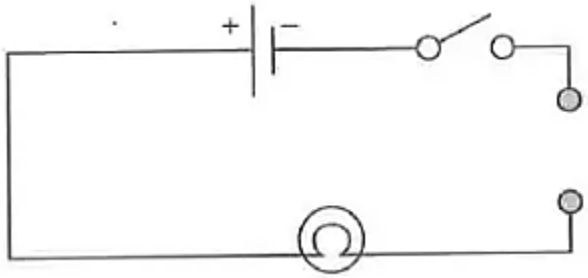

Figure 8. Circuit Diagram

(i) Describe the procedure which would be used to test whether the material is a conductor.

1. Set up apparatus as shown in figure 8 with the material at A
2. Close the switch

Results and Observations:

If the light turns on, the circuit is complete and hence the material is a conductor.

If the light remains off then the material is not a conductor

Best Online Lessons in the Caribbean
WhatsApp **+1868-310-1306** for more information

(3 marks)

(ii) Name ONE material which is an electrical conductor and ONE which is an insulator.

Conductor ……Copper……..

Insulator ……Glass……..

(2 marks)

(iii) On the diagram in Figure 8, mark the direction of electron flow

Electron flow from negative terminal to positive as shown below.

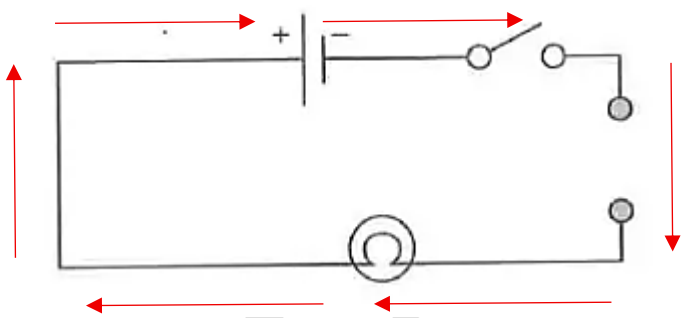

(1 mark)

(b) Figure 9 shows a circuit diagram which has a combination of four resistors and an ammeter, A.

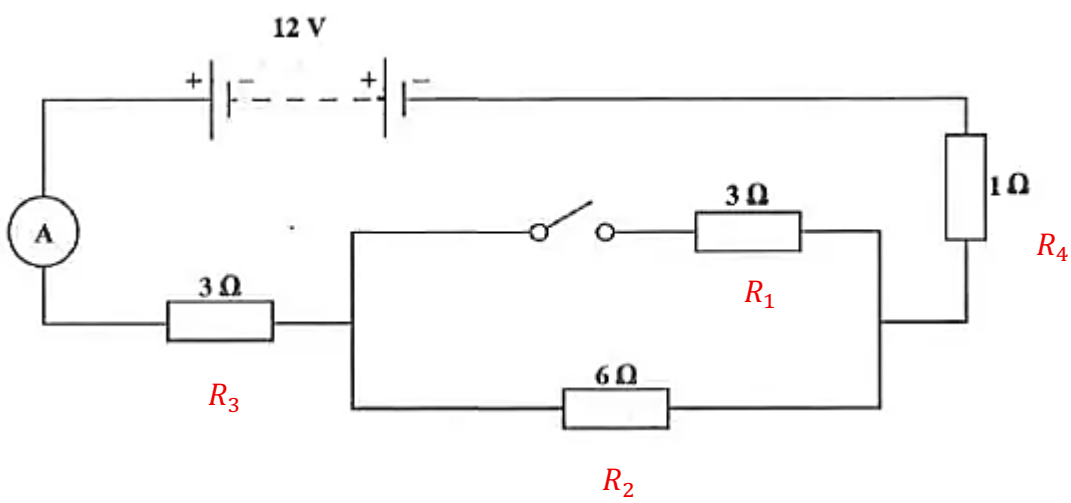

Figure 9. Circuit Diagram

Best Online Lessons in the Caribbean
WhatsApp **+1868-310-1306** for more information

Calculate the reading of the ammeter when the switch is

(i) Open

In this configuration, R_2, R_3 *and* R_4 are in series

Total resistance, $R_5 = R_2 + R_3 + R_4$

$$R_5 = 3 + 6 + 1$$

$$R_5 = 10\Omega$$

Since $V = IR$

$$I = \frac{V}{R}$$

$$I = \frac{12}{10}$$

$$I = 1.2A$$

(3 marks)

(ii) Closed

Resistance in Parallel, R_p

$$\frac{1}{R_p} = \frac{1}{R_1} + \frac{1}{R_2}$$

$$\frac{1}{R_p} = \frac{1}{3} + \frac{1}{6}$$

$$\frac{1}{R_p} = \frac{1}{2}$$

$$R_p = 2$$

Kerwin Springer

Therefore Total Resistance, R_T

$R_T = R_3 + R_p + R_4$

$R_T = 3 + 2 + 1$

$R_T = 6\Omega$

Hence,

$I = \frac{V}{R}$

$I = \frac{12}{6}$

$I = 2A$ (4 marks)

(c) Calculate the power in the 1Ω resistor when the switch is closed.

Voltage $= \frac{R_4}{R_T} \times 12V$

Voltage $= \frac{1}{6} \times 12V$

Voltage $= 2V$

Therefore Power in 1Ω resistor

$P = IV$

$P = (2)(2)$

$P = 4W$ (2 marks)

Total 15 marks

Kerwin Springer

5. (a) (i) Define the term 'electric field'

This is the region around a charged particle or object where another charged particle or object will experience a force.

(3 marks)

(ii) Figure 10 represents the electric field between and around two charged objects.

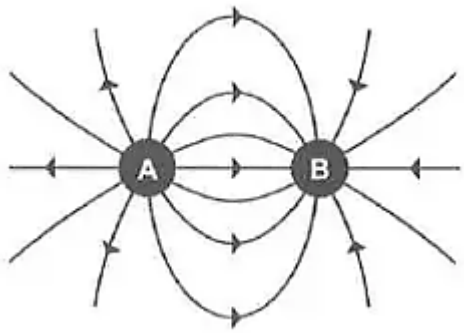

Figure 10. An electric field

State the type of charge at object A.

Since the arrows denoting the electric field are leaving object A it has to be positive.

(1 mark)

(b) Explain how a polythene rod when rubbed with fur becomes negatively charged.

The polythene rod has a greater affinity for electrons than the fur. Upon contact, the frictional energy is enough for surface electrons to be removed from the fur and go to the rod. The excess electrons make the rod net negative.

(2 marks)

Kerwin Springer

(c) A magnetic relay is used to switch on a circuit carrying a large current.

Figure 11 shows an electromagnet used in a magnetic relay to operate the starter of a car.

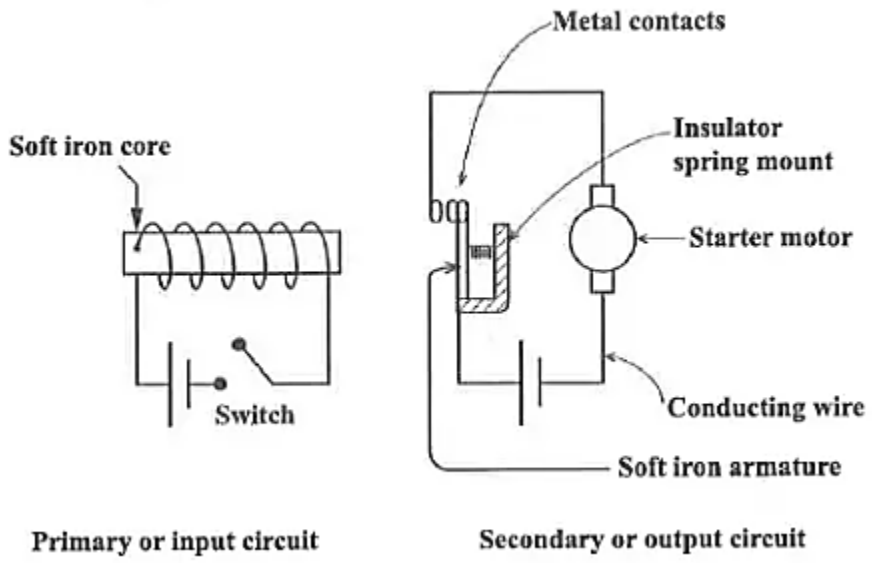

Figure 11. A magnetic relay

Explain how the magnetic relay can be used to operate the start motor in Figure 11.

The magnetic relay has two circuits, Primary and Secondary. In the primary circuit we can use a small current to turn on the secondary circuit which has a large(dangerous) current. When the switch is closed in the primary circuit, it creates an electromagnet which is positioned to attract the metal contacts and close the secondary circuit without physically touching it. This allows for the large current to operate the starter motor which is required to turn the engine initially, hence starting the car. Releasing the key will open the primary circuit and the demagnetised metal contacts open the secondary circuit.

(5 marks)

Kerwin S

(d) Figure 12 shows a wire connected to a centre zero galvanometer. The wire is placed between the poles of a permanent magnet.

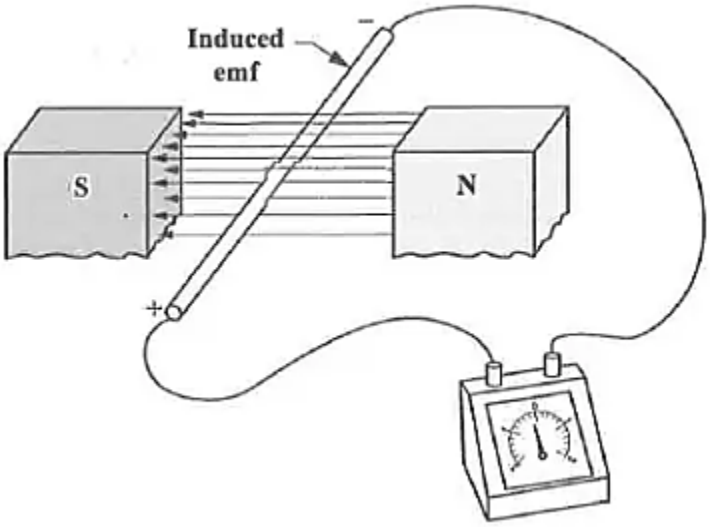

Figure 12. A wire placed between the poles of a permanent magnet

State what is observed on the galvanometer when the wire is moved in the direction shown by the arrows.

(i) Parallel to the magnetic field ←→

No movement on the galvanometer

(1 mark)

(ii) Upwards through the magnetic field ↑

The galvanometer would show a deflection to the right

(1 mark)

(iii) Downward through the magnetic field ↓

The galvanometer would show a deflection to the left.

Kerwin Springer

STUDENT HUB

(2 marks)

6. (a) A single nuclear fission reactor could produce most of the electricity requirements for many . Caribbean countries.

(i) State TWO arguments against building such a nuclear reactor in one of the larger islands of the Caribbean.

- Nuclear fission reactors require a large startup cost and investment in a skilled workforce, which would require a large percentage of the GDP of a Caribbean country.
- The radioactive waste from a nuclear plant is difficult to deal with and may require large areas of land not available in islands.

(2 marks)

(ii) Give ONE argument to support the building of such a reactor to produce the electricity required for an island.

- If the reactor can be built, the country will produce less air pollution/greenhouse gases which is produced by the Natural gas power stations that are commonly used to generate power in the Caribbean.

(1 mark)

(b) (i) Define the term 'radioisotope'

An unstable isotope of an element where the isotope has the same number of protons but different number of neutrons. Its nucleus is unstable due to the wrong balance in proton to neutron ratio and it attempts to achieve stability by random radioactive decay.

(1 mark)

Kerwin Springer

STUDENT HUB

(ii) Radioisotopes have useful applications in the fields of medicine, agriculture and industry.

Choose TWO of the fields above and describe ONE useful application of radioisotopes in EACH.

Field	Application
Agricultural	Sterilization, Pest control
Medicine	Medical imaging, Pacemakers

(2 marks)

(c) The letters, P, Q, R, X and Y represent 5 different nuclides.

$$^{40}_{19}P + ^{235}_{92}Q + ^{40}_{18}R \; ^{238}_{92}X + ^{39}_{19}Y$$

Determine

(i) Which nuclides have identical mass numbers

$^{40}_{19}P$ *and* $^{40}_{18}R$ (1 mark)

Kerwin Springer

Best Online Lessons in the Caribbean
WhatsApp **+1868-310-1306** for more information

(ii) How many neutrons are in the heaviest nuclide

$^{238}_{92}X$ is the heaviest.

Number of Neutrons $238 - 92 = 146$

(2 marks)

(iii) Which pair of nuclides are isotopes

$^{235}_{92}Q$ *and* $^{238}_{92}X$ (same atomic number)

(2 marks)

(e) In an experiment to determine the half-life of a radioactive isotope, the initial count rate of 16,000 counts per minute was recorded. After 100 seconds the new count rate was 1000 counts per minute.

Use the information given to calculate the half-life of the isotope.

Initial = 16000

Final = 1000

Time = 100 seconds

$$16000 \xrightarrow{1} 8000 \xrightarrow{2} 4000 \xrightarrow{3} 2000 \xrightarrow{4} 1000$$

4 half-lives = 100 seconds

1 half-life = 25 seconds

(4 marks)

Kerwin Springer

Total 15 marks

End of Test

Kerwin Springer